Tilt Sensor Switch

Item No.	RBS020902T	Description	Ball-Contact	Version	15
Page	1 of 8		Publish Date	Jun. 21, 2018	

- FUNCTIONS
  1. Horizontal Tilt Detecting
  2. Vertical Rotation Detecting
  3. Shock Detecting

- APPLICATIONS
  1. Screen Rotation
  2. Web Camera
  3. Alarm System
  4. Iron Position Detecting
  5. Bicycle lights flashing
  6. Step Counter

- FEATURES
  1. Suitable for horizontal PCB.
  2. Switch state: SMD Normal Open.
  3. Tiny size, suitable for small space.
  4. Wing-shaped terminals, a feature enables half body of the sensor switch to be buried into PCB.
  5. Gold-plated ball and terminals, low possibility of oxidization.
  6. All plastic materials subject to industrial purpose, resist high temperature and meet fireproof function.
  7. Simple ON and OFF signals, easy for design.
  8. RoHS compliance, an ideal substitute for mercury switch.
  9. A more economical tilt and rotation detection option than IC design solution.
  10. All made in Taiwan and examined before shipment

- PATENTS
  1. Taiwan Patent NO.390563
  2. China Patent NO.ZL 200710123228.X

Tilt Sensor Switch

Item No.	RBS020902T	Description	Ball-Contact	Version	15
Page	2 of 8		Publish Date	Jun. 21, 2018	

● DIMEN SIONS / OPERATION / P.C.B. LAYOUT (Unit: mm, Tolerance: ±0.25mm)

Fig. 1

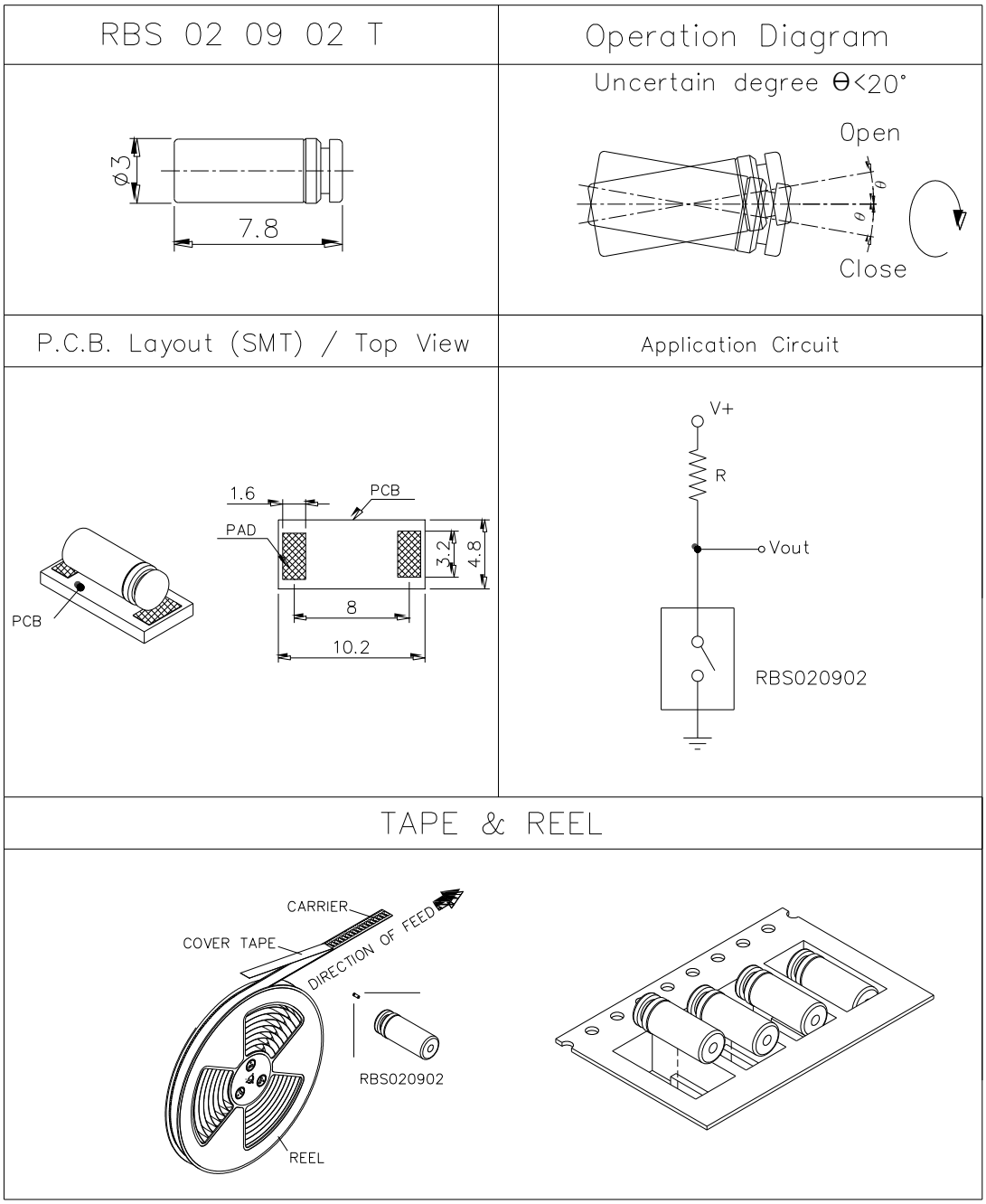

No.1, Jingke 3rd Rd., Nantun Dist., Taichung City 40852, Taiwan
http://www.oncque.com

Tel: +886-4-2358-8178
Fax:+886-4-2358-3555
E-mail: oncque@oncque.com.tw

Tilt Sensor Switch

Item No.	RBS020902T	Description	Ball-Contact	Version	15
Page	3 of 8		Publish Date	Jun. 21, 2018	

● Current/Voltage Suggested

Input Current (mA)	Operating Voltage (V)	Condition
1.0	5	--

● ELECTRICAL CHARACTERISTICS

1.	Contact Rating	10mA, 5VDC
2.	Contact Resistance	10Ω max.
3.	Operation Diagram	Refer to Fig. 1
4.	Insulation Resistance	50MΩ min. at 100VDC
5.	Dielectric Strength	50VDC min. for 1 minute
6.	Capacitance	5pF max.
7	Conductive Rate	85% min.

● RELIABLE TEST ITEMS

Reliable Test for RBS020902T

	Test Item	Contents
1	IR Reflow	Peak temp.=255~260℃
2	Operating Temperature	-25℃ ~ 85℃
3	Storage Temperature	-40℃ ~ 85℃
4	Humidity	40 ℃ / 95 %RH
5	Mechanical Life	2 Hz, horizontal 1,000,000 times
6	Electrical Life	100,000 times

● SOLDERING CONDITION

Following soldering conditions are for reference only, please use soldering information that solder paste manufacturer recommends.

Condition / Suitable Production Process	Soldering Temperature	Soldering Time	Wattage of Manual Soldering	Type
IR Reflow	Please refer to following < Table of classification Reflow profile > and Fig. 2		-	SMD
Manual Soldering	300±5℃	< 3 seconds max.	30W or Temperature-controlled manual soldering	SMD

No.1, Jingke 3rd Rd., Nantun Dist., Taichung City 40852, Taiwan
http://www.oncque.com

Tel: +886-4-2358-8178
Fax:+886-4-2358-3555
E-mail: oncque@oncque.com.tw

< Table of classification Reflow profile>

Item	Pb process	Pb free process
Pre-heat and Soak Temperature min.(Tsmin) Temperature max.(Tsmax) Time (Tsmin to Tsmax)(ts)	 100 °C 150 °C 60-120 seconds	 150 °C 200 °C 60-120 seconds
Average Rate of temperature rising up (Tsmax to Tp)	3 °C/second max.	3 °C/second max.
Liquidous Temperature (TL) Time at Liquidous (tL)	183 °C 60-150 seconds	217 °C 60-150 seconds
Peak package body Temperature (Tp)*	230 °C ~235 °C *	255 °C ~260 °C *
Classification temperature(Tc)	235 °C	260 °C
Time(tp)** within 5 °C of the specified classification temperature (Tc)	20** seconds	30** seconds
Average ram-down Rate (Tp to Tsmax)	6 °C/second max.	6 °C/second max.
Time 25 °C to peak temperature	6 minutes max.	8 minutes max.
* Tolerance for peak profile temperature (Tp) is defined as a supplier minimum and a user maximum. ** Tolerance for time at peak profile temperature (tp) is defined as a supplier minimum and a user maximum.		

Fig. 2

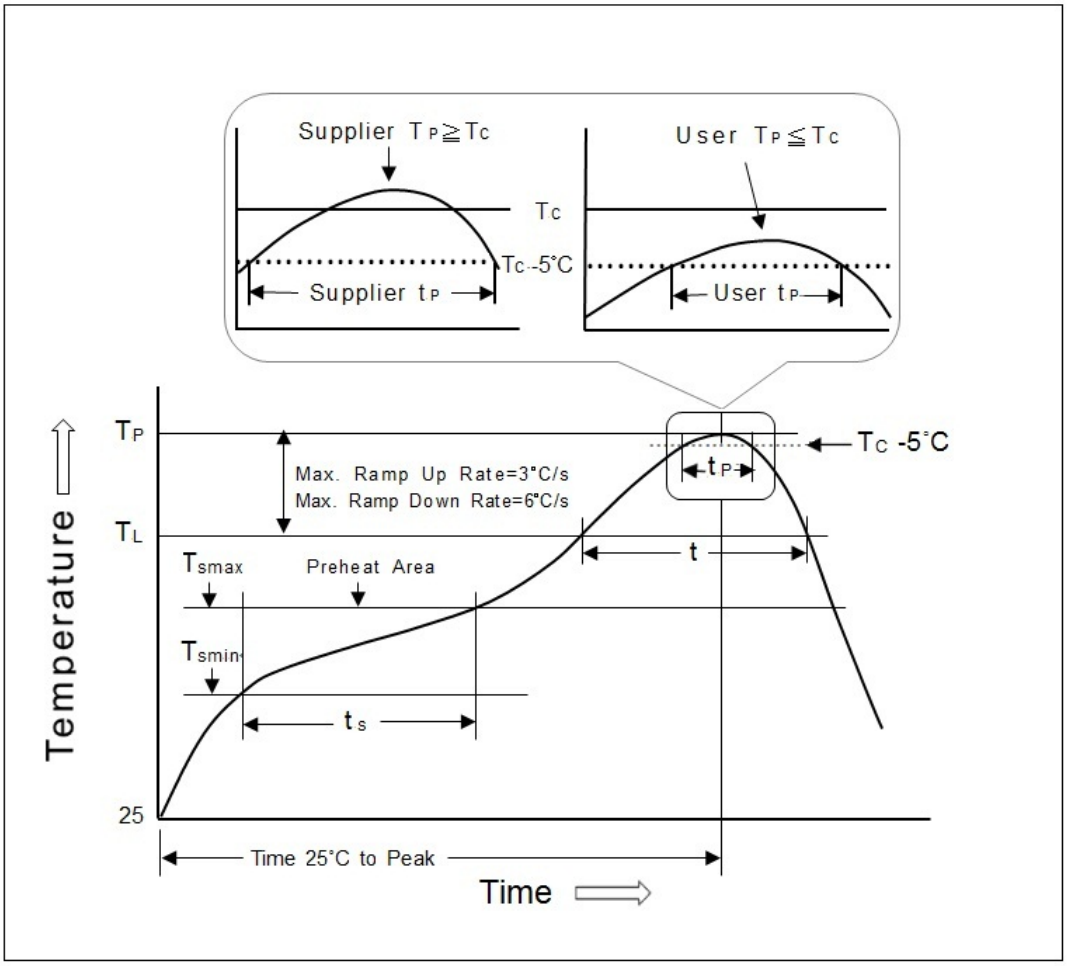
Supplier TP≧Tc
User TP≦Tc
Tc
Tc-5°C
Supplier tP
User tP
TP
TL
Tc -5°C
tP
Max. Ramp Up Rate=3°C/s
Max. Ramp Down Rate=6°C/s
t
Tsmax
Preheat Area
Tsmin
ts
25
Time 25°C to Peak
Temperature
Time

● PACKAGE

	Part Number	Package	Quantity	Total	Dimension(mm)
1.	RBS020902	PE Bag	2,000 pcs	2,000 pcs	205L*145W
		Inner Box	10 PE Bags	20,000 pcs	348L*191W*85H
		Carton	3 Boxes	60,000 pcs	364L*278W*213H

※ Package shown as below for reference.

	Part Number	Package	Quantity	Total	Dimension(mm)
2.	RBS020902T	Tape & reel	2,500 pcs	2,500 pcs	φ330*25H
		Inner Box	2 Reels	5,000 pcs	355L*340W*68H
		Carton	4 Boxes	20,000 pcs	373L*358W*309H

※ Package shown as below for reference.

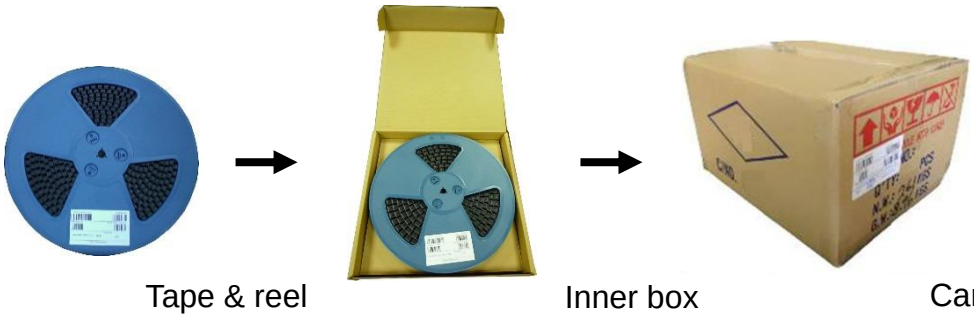

NOTES

1. Suggestion for usage: For vibration usage or application, we suggest to add hysteresis for IC; if vibration is heavy, optical type of sensor switch is recommended.
2. For the continued product improvement as one of the company policy, specifications may change or update without notice. The latest information can be obtained through our sales offices. Normally, all products are supplied under our standard conditions.
3. If buyer's products will stay in power supply for a long time which needs very high stability, optical sensor switch is strongly recommended.

PRECAUTIONS FOR USE

1. If the products is intended to be used for other endurance equipment requiring higher safety and reliability such as life support system, space and aviation devices, disaster and safety system, it's necessary to make verification of conformity or contact us for the details before using.
2. Do not try to clean the switch with a solvent or similar substance after the soldering process.
3. Use water-soluble flux may damage the switch.
4. Please follow the soldering instruction accordingly, otherwise might lead to defective.
5. Do not use switch in the environment of high humidity, because such an environment may cause the leakage current between the terminals.
6. Please do not exceed the rated load as there will be a risk of disabling the product function.
7. In the circuit, switch should not be near or directly connected with the magnetic component solder joints (for example: relays, transformers, etc.).
8. Complete welding within 168 hours after unpacking, to avoid products humid which caused by prolonged exposure.

No.1, Jingke 3rd Rd., Nantun Dist., Taichung City 40852, Taiwan
http://www.oncque.com

Tel: +886-4-2358-8178
Fax:+886-4-2358-3555
E-mail: oncque@oncque.com.tw

Mouser Electronics

Authorized Distributor

Click to View Pricing, Inventory, Delivery & Lifecycle Information:

OncQue:
RBS020902