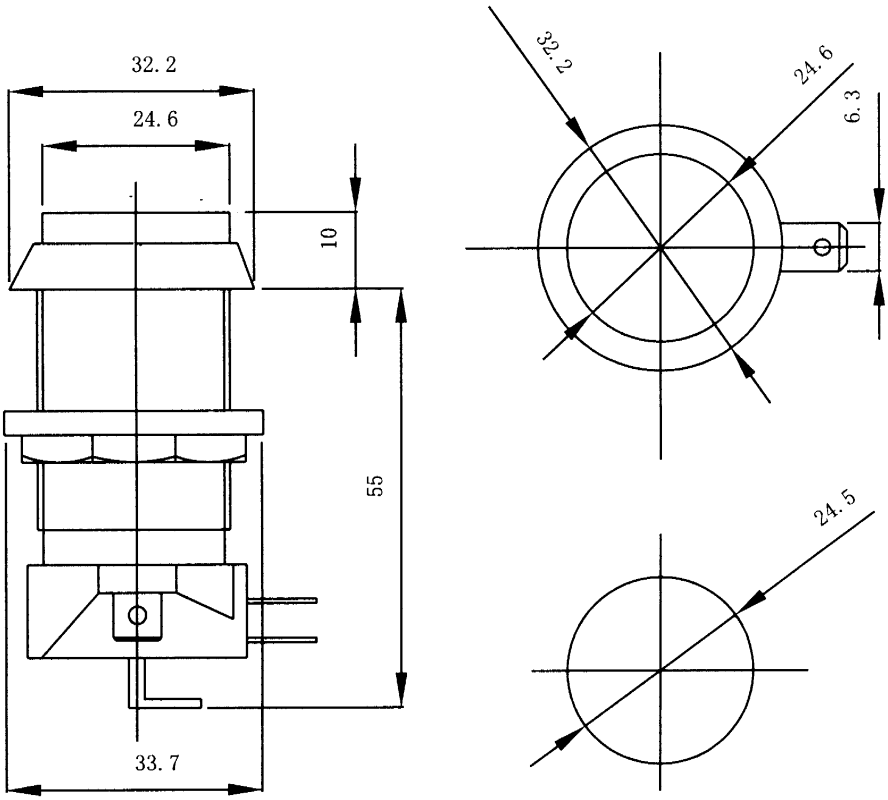
32.2
24.6
10
55
33.7
32.2
24.6
6.3
24.5